EXPERIENCE. TRU INNOVATION.

BNC INTERFACE

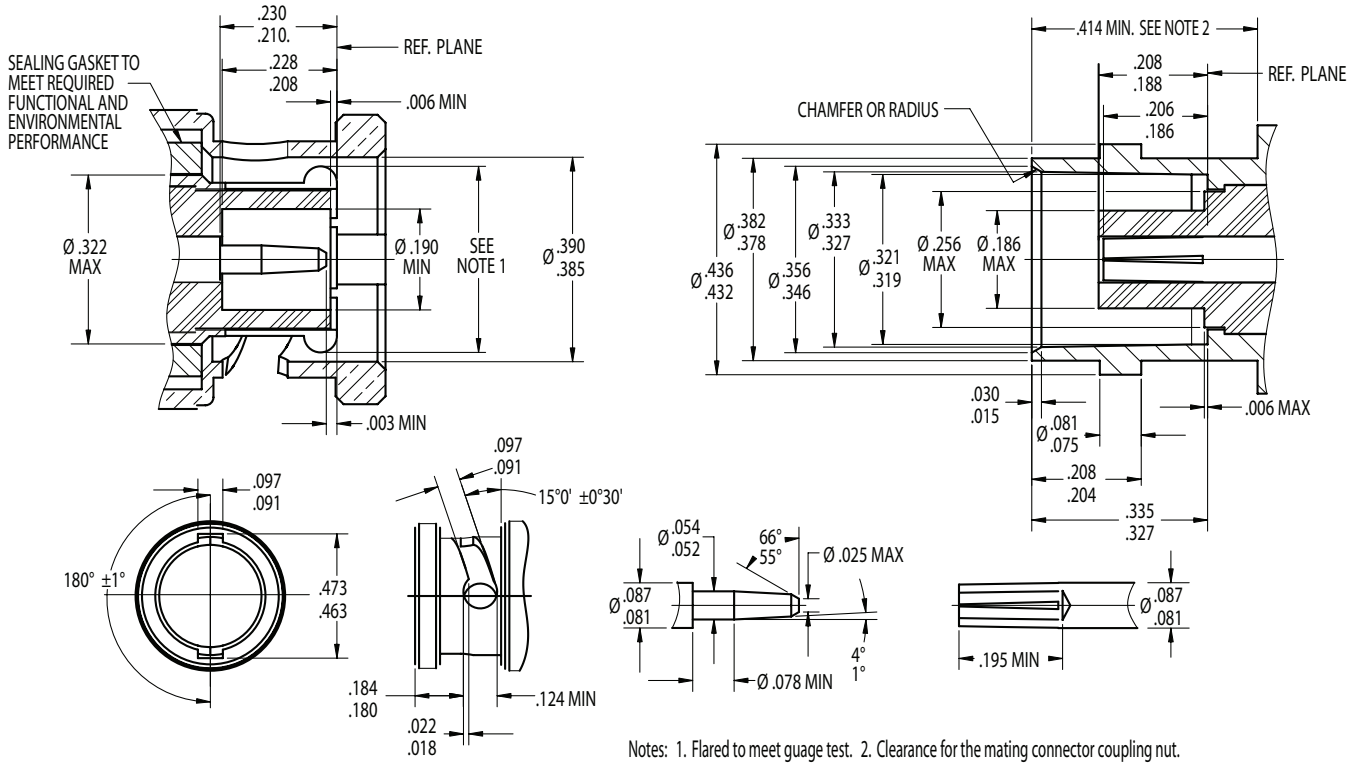

Notes: 1. Flared to meet guage test. 2. Clearance for the mating connector coupling nut.

ELECTRICAL

Nominal Impedance	50 ohms
Frequency Range	DC to 4 GHz
Voltage Rating	500 volts rms
Dielectric Withstanding Voltage	1,500 volts rms

MECHANICAL

Mating Characteristics	per MIL-STD-348
Connector Durability	500 cycles min.
Recommended Torque	N/A (Bayonet Coupling)

ENVIRONMENTAL

Temperature Range	-85°Fto +329°F (-65°C to +165°C)
Vibration	MIL-STD-202 Method 204
Shock	MIL-STD-202 Method 213
Moisture Resistance	MIL-STD-202 Method 106
Corrosion (salt spray)	MIL-STD-202 Method 101

MATERIALS / FINISHES

Body	Brass, Silver or Nickel Plated
Contacts (Inner)	Female: Beryllium Copper, Silver or Gold Plated. Male: Brass, Silver or Gold Plated
Contacts (Outer)	Brass, Silver or Nickel Plated
Contacts (Slotted)	Beryllium Copper, Silver or Nickel Plated
Insulators	Teflon
Gaskets & Seals	Silicone Rubber

TRU Corporation

245 Lynnfield Street, Peabody, MA 01960 1-800-COAX-TRU (1-800-262-9878) www.trucorporation.com